C.I.P.	22 Rem. Jet Mag.	TAB.	IV
		Date	84-06-14
	Country of Origin: US	Revision	00-06-07

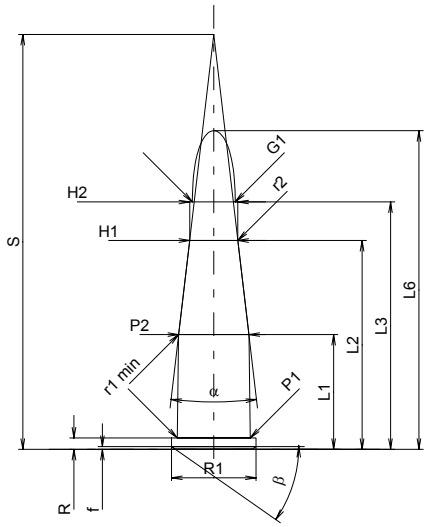

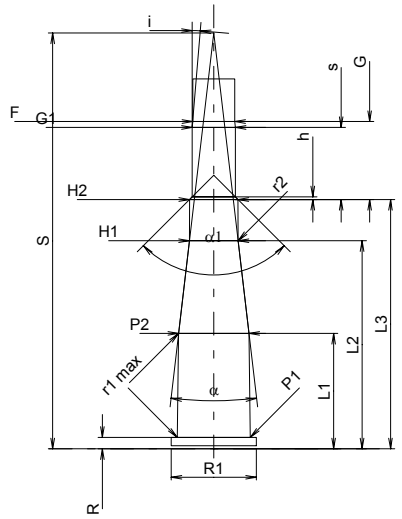

Scale 1:1

CARTRIDGE MAXI

Lengths

L1	=	15.19	
L2	=	27.62	
L3 1)	=	32.72	
L4	=		
L5	=		
L6	=	42.14	

Case Head

R 1)	=	1.50	-0.25
R1	=	11.18	
R3	=		
E	=		
E1	=		
e min	=		
δ	=		
f	=	0.38	
β	=	35°	

Powder Chamber

P1	=	9.65
P2 *	=	9.29

Junction Cone

α *	=	13°21'
S *	=	54.88
r1 min	=	0.76
r2	=	2.54

Collar

H1 *	=	6.38
H2 1)	=	6.38

Projectile

G1 1)	=	5.65
G2	=	
F	=	
L3+G 1)	=	43.03

Pressures (Energies)
Method Transducer

Pmax	=	2550	bar
PK	=	2933	bar
PE	=	3315	bar
M	=	10.50	

Miscellaneous Dimensions

Fe 1)	=	0.25
delta L	=	

CHAMBER MINI

Lengths

L1	=	15.26
L2	=	27.52
L3 1)	=	32.97

Breech

R 1)	=	1.52
R1	=	11.28
R2	=	
R3	=	
r	=	

Powder Chamber

E	=	
P1 1)	=	9.65
P2 *	=	9.30

Junction Cone

α *	=	13°21'
S *	=	54.99
r1 max	=	0.76
r2	=	3.18

Collar

H1 *	=	6.43
H2 1)	=	6.40

Commencement of Rifling

G1 1)*	=	5.69
G 1)	=	10.31
α1 *	=	90°
h	=	0.35
s	=	9.53
i 1)*	=	4°45'
w	=	

Barrel

F 1)*	=	5.56
Z 1)	=	5.65

Grooves

b	=	1.80	
N	=	6	
u	=	381.00	
Q	=	24.77	mm²

Dimensions in << mm >>
Dimensions and Tolerances for Proof Barrels
see Appendix CR 1.

Notes: 1) Check for safety reasons
* Basic dimensions